Skin_WF

Wandleuchten | 198-264 V
5 x powerLED 9.9 W DC - 11 W AC | CRI 80
76958M15

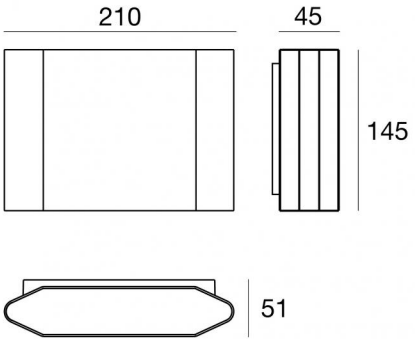

Technische Daten	
Typ	Oberfläche
Installationsposition	Wand
Installationsumgebung	Outdoor
Lichtquelle	LED
Circuit structure	powerLED
Optik	Spot
Light emission direction	downward
Lampe Nennleistung	9.9 W DC
Gesamtleistung	11 W
Lichtstrom (Lichtquelle)	1330 lm
Nominale Eingangsspannung	220 - 240 V AC
Eingangsspannungsbereich	198 - 264 V AC
Frequency	50 - 60 Hz
Ähnlichste Farbtemperatur / Tone	2700 K
Farbwiedergabeindex	80 Ra
Gleichstrom/Gleichspannung	AC
Isolierklasse	1
IP	IP65
IK	IK06
Glühdrahtprüfung	850°
Direkte Montage auf normal entflammbaren Oberflächen	Nein
CE	Ja
Einschließlich Driver	Driver
Leuchte dimmbar	Nein
Schwenkbarkeit	Nein
Drehbarkeit	Nein
Begehbarkeit	Nein
Überrollbarkeit	Nein
Einschließlich Kabel	Nein
Harzbeschichtung	Nein
Typ Lichtabstrahlung	Einflammig
Nettogewicht	1.512 Kg
Schutz vor elektrostatischen Entladungen	Ja
Schutz vor Stoßspannungen	1 KV

Oberfläche Gehäuse	
Material	Stranggepresstes Aluminium EN AB - 46100
Farbe	Weiß
Bearbeitungstyp	Pulverbeschichtung

Oberfläche Diffusor	
Material	Polycarbonat UV-beständige - Extra-helles Glas
Farbe	Schwarz - transparent
Bearbeitungstyp	Siebdruck

Oberfläche bügel	
Material	Stahl AISI 304
Farbe	Stahl

Linea Light Group reserves the right, without any advance notice, to change the characteristics of their products, as well as the availability of the same at any time. No product, relative technical data, illustrations and information are binding for Linea Light Group. Linea Light Group will not be held liable for any illustration, text and/or translation\ errors. All values indicated are measured values. There is a +/- 10% tolerance for the flow, CCT and power data.

Skin_WF

Wandleuchten | 198-264 V | 5 x powerLED 9.9 W DC - 11 W AC | CRI 80
76958M15

Single emission wall lights for outdoor application. The super warm white LED light source with a spot light distribution is composed of 5 powerled LEDs with CCT of 2700 K and a CRI 80; the source luminous flux is 1330 lm, with a 134.3 lm/W nominal luminous efficacy.

The device body is made of die-cast aluminium en ab - 46100 and features a white finish, processed by means of powder coating; the diffuser is made of extra clear glass with a silk-screening treatment; the diffuser is made of uv resistant polycarbonate. The ingress protection degree is IP65; the total weight is of 1.512 kg.

The total absorbed power is 11 W.

The device features protection class I and can be wall lights-mounted.

Compliant with the EN 60598-1 standard and its specific provisions.

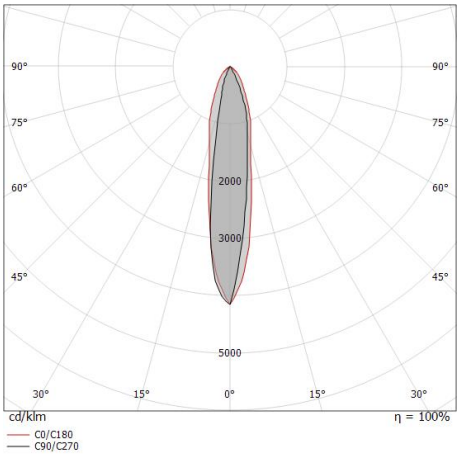

Energieeffizienzklasse
ieses Produkt enthält eine Lichtquelle der Energieeffizienzklasse D.

Illuminotechnical Eigenschaften	
Light Output Ratio (LOR)	44 %
Lichtstrom (Lichtquelle)	1330 lm
Leuchten Lichtstrom	595 lm
Consumption	11 W
Leuchten Lichtausbeute	54 lm/W
Farbtemperatur	2700 K
Standard Deviation of Colour Matching	1.5 Step
Farbwiedergabeindex	80 Ra
Standardumgebungstemperatur	-20 / +50°C
Typische Temperatur am Glas	40°C

LED Life / Failure Ratio
L70 B10 C0 361980h (at Tj 60 Ta 25)

OPTICAL	
Optik C0/C180	20°
Light distribution simmetry	Asymmetrical

Linea Light Group reserves the right, without any advance notice, to change the characteristics of their products, as well as the availability of the same at any time. No product, relative technical data, illustrations and information are binding for Linea Light Group. Linea Light Group will not be held liable for any illustration, text and/or translation\ errors. All values indicated are measured values. There is a +/- 10% tolerance for the flow, CCT and power data.

linealight.com